Board Stack-up:
TOP- Routing- Flud with ground plane where possible
Prepreg
INNER1 - Routing - controlled impedance pairs and general routing
Prepreg
GND - Power Plane
0.004" Prepreg
3.3V - Power Plane
Prepreg
INNER2 - Controlled Impedance and general routing
Prepreg
BOTTOM- Routing- Flood with copper where possible

Layout:
"Front" refers to the edge of the board to the right when looking at the component side of the board with PCI connector down.
Lay out LVDS pairs according to recommendations in Ch. 4 of http://www.national.com/appinfo/lvds/files/LOM_2.pdf.
Locate comparators and logic near front panel.
Locate DB-9 and LEMO connectors near each other.
Locate test connector at top (as close to top as reasonable),
Locate harmonica connector at back of board with openings facing up.
Space harmonica connector at least 1/2" down from top edge of board to allow for cable routing inside computer.
Locate LVDS drivers near harmonica connector.
MAKE LVDS PAIRS BETWEEN DRIVER AND HARMONICA CONNECTOR ALL THE SAME LENGTH!!!
Match lengths of + and - LVDS lines in pairs. (see reference)

Build:
Both Y1 and Y2 cannot be mounted at the same time.

Gerald Przybylski
Lawrence Berkeley National Laboratory

Title	Fabrication	
Size A	Document Number Fab	Rev 0
Date: Friday, January 09, 2004	Sheet 1 of 4	

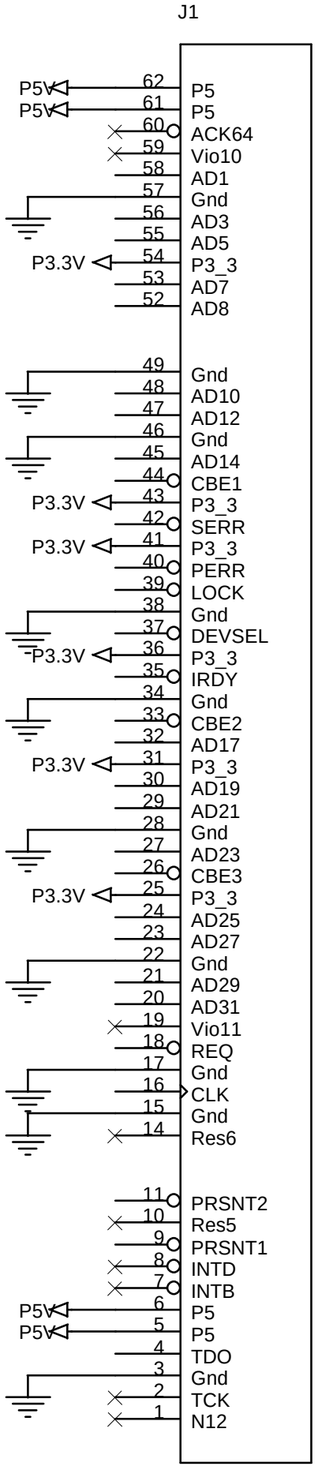

component_side_B

Gerald Przybylski
Lawrence Berkeley National Laboratory

Title	Mechanical	
Size A	Document Number <Doc>	Rev <RevCode>
Date: Friday, January 09, 2004	Sheet 2 of 4	

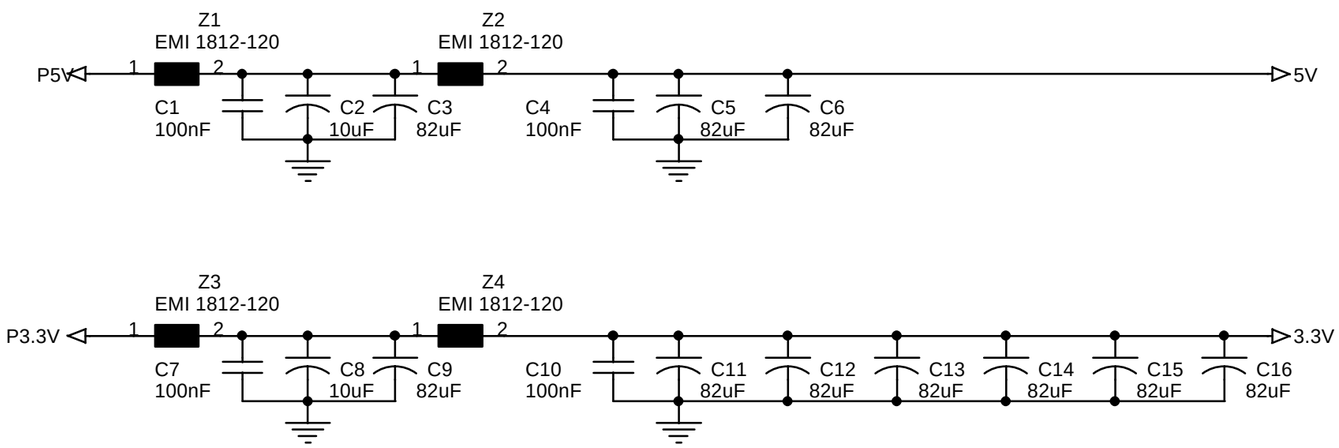

Gerald Przybylski
Lawrence Berkeley National Laboratory

Title	Power	
Size A	Document Number Power	Rev 0
Date: Friday, January 09, 2004	Sheet 3 of 4	

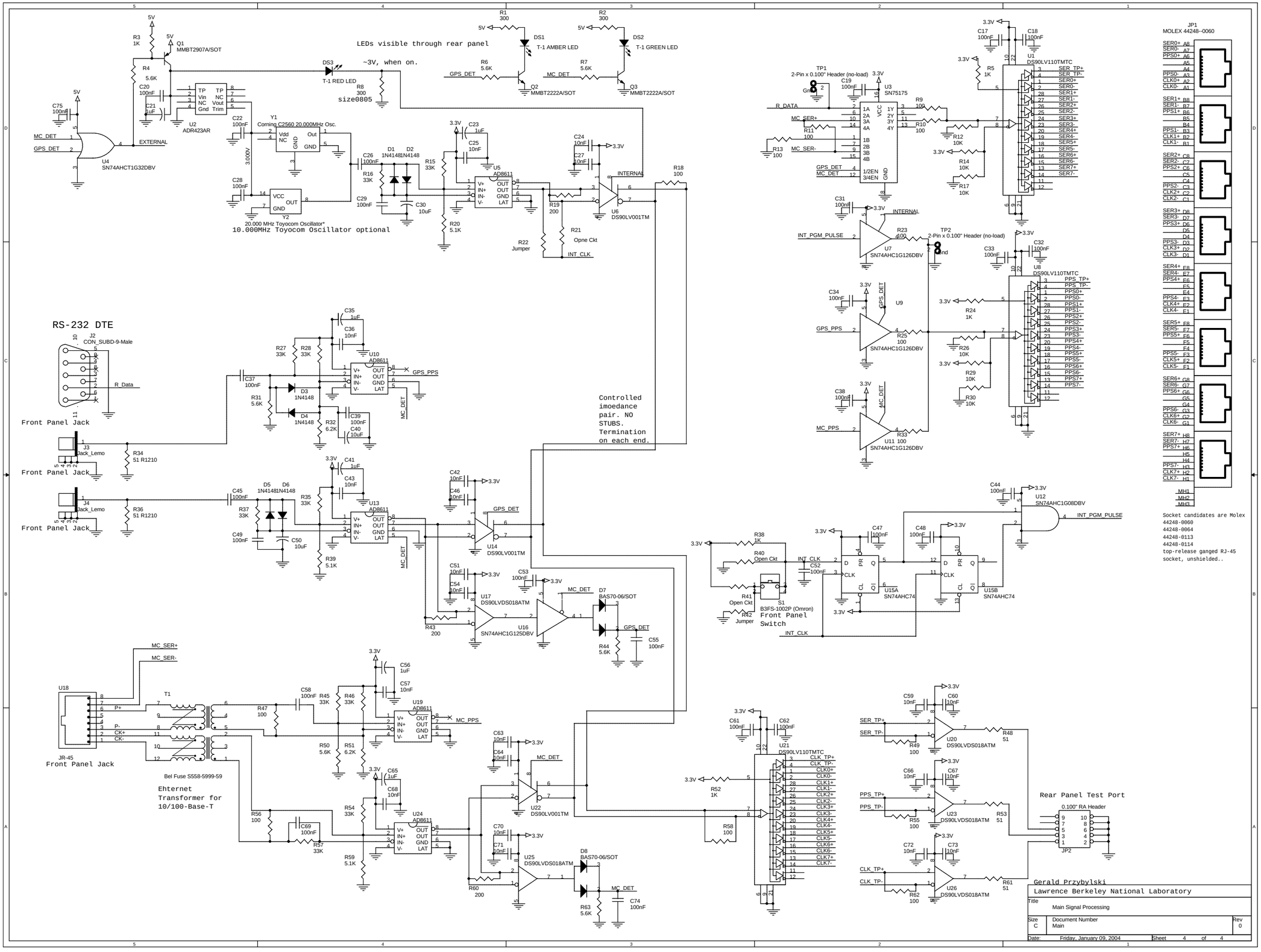

Gerald Przybylski

Lawrence Berkeley National Laboratory

Title	Main Signal Processing	
Size C	Document Number Main	Rev 0
Date: Friday, January 09, 2004	Sheet 4 of 4	