Board Stack-up:
TOP- Routing- Flud with ground plane where possible
Prepreg
INNER1 - Routing - controlled impedance pairs and general routing
Prepreg
GND - Power Plane
0.004" Prepreg
3.3V - Power Plane
Prepreg
INNER2 - Controlled Impedance and general routing
Prepreg
BOTTOM- Routing- Flood with copper where possible

Layout:
"Front" refers to the edge of the board to the right when looking at the component side of the board with PCI connector down.
Lay out LVDS pairs according to recommendations in Ch. 4 of http://www.national.com/appinfo/lvds/files/LOM_2.pdf.
Locate comparators and logic near front panel.
Locate DB-9 and LEMO connectors near each other.
Locate test connector at top (as close to top as reasonable),
Locate harmonica connector at back of board with openings facing up.
Space harmonica connector at least 1/2" down from top edge of board to allow for cable routing inside computer.
Locate LVDS drivers near harmonica connector.
MAKE LVDS PAIRS BETWEEN DRIVER AND HARMONICA CONNECTOR ALL THE SAME LENGTH!!!
Match lengths of + and - LVDS lines in pairs. (see reference)
Jumper footprints and open-ckt footprints should be the same size to permit easy configuration change.

Build:
Both Y1 and Y2 cannot be mounted at the same time.

Gerald Przybylski
Lawrence Berkeley National Laboratory

Title	Fabrication	
Size A	Document Number DSB-Sheet1	Rev 0
Date: Monday, January 26, 2004	Sheet 1 of 4	

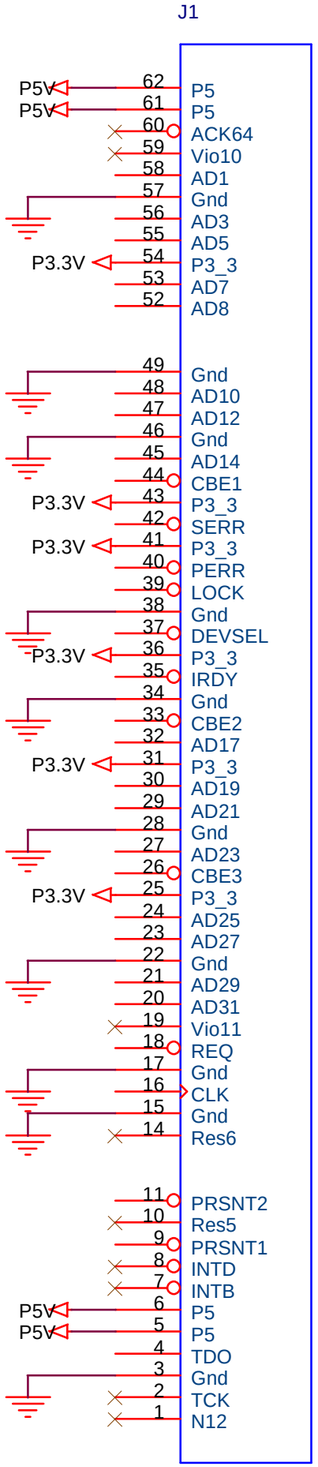

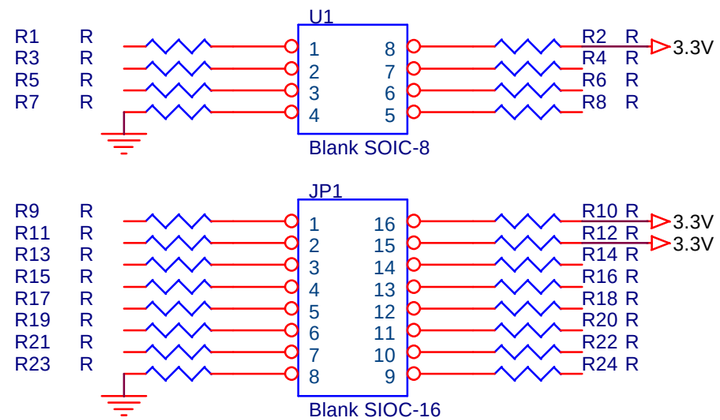

Uncommitted sockets for breadboarding, if required.

Gerald Przybylski
Lawrence Berkeley National Laboratory

Title	Mechanical	
Size A	Document Number DSB-Sheet2	Rev <RevCode>
Date: Monday, January 26, 2004	Sheet 2 of 4	

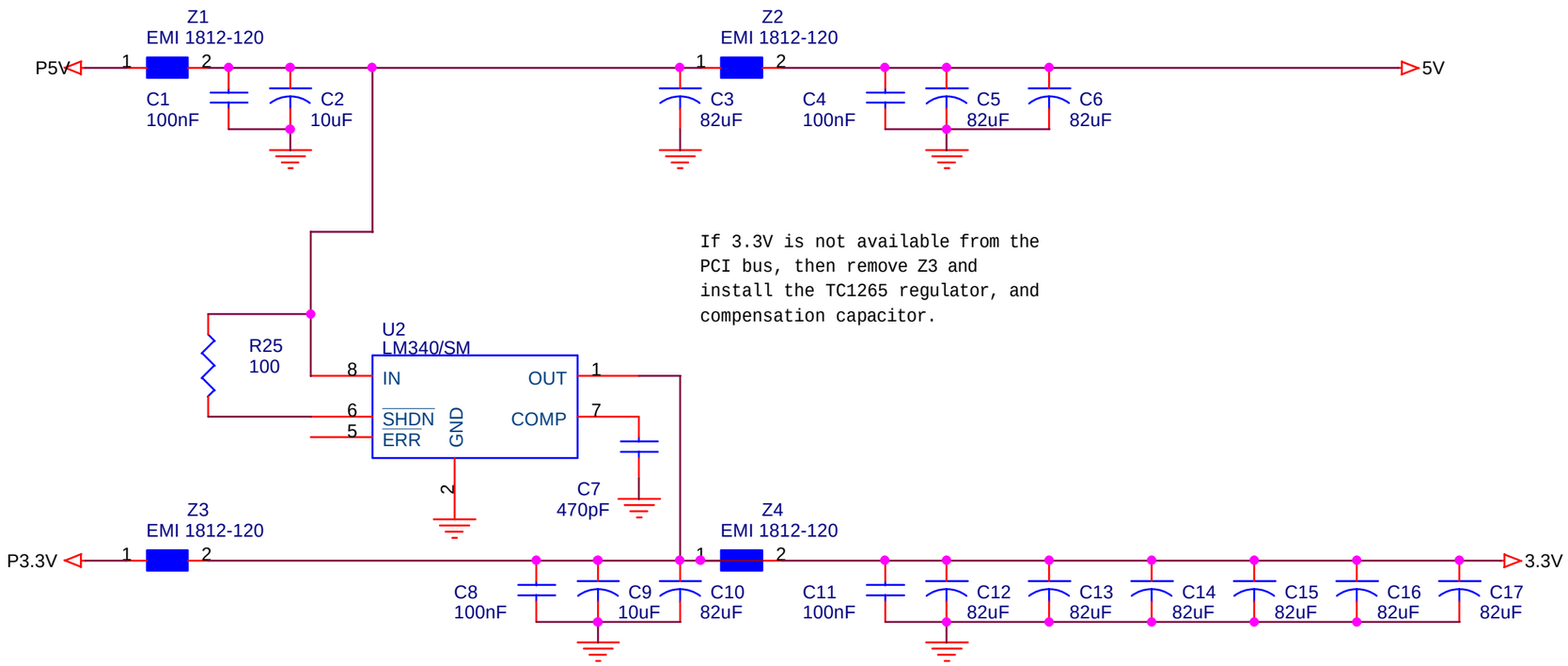

Gerald Przybylski
Lawrence Berkeley National Laboratory

Title	Power	
Size A	Document Number DSB-Sheet 3	Rev 0
Date: Monday, January 26, 2004	Sheet 3 of 4	

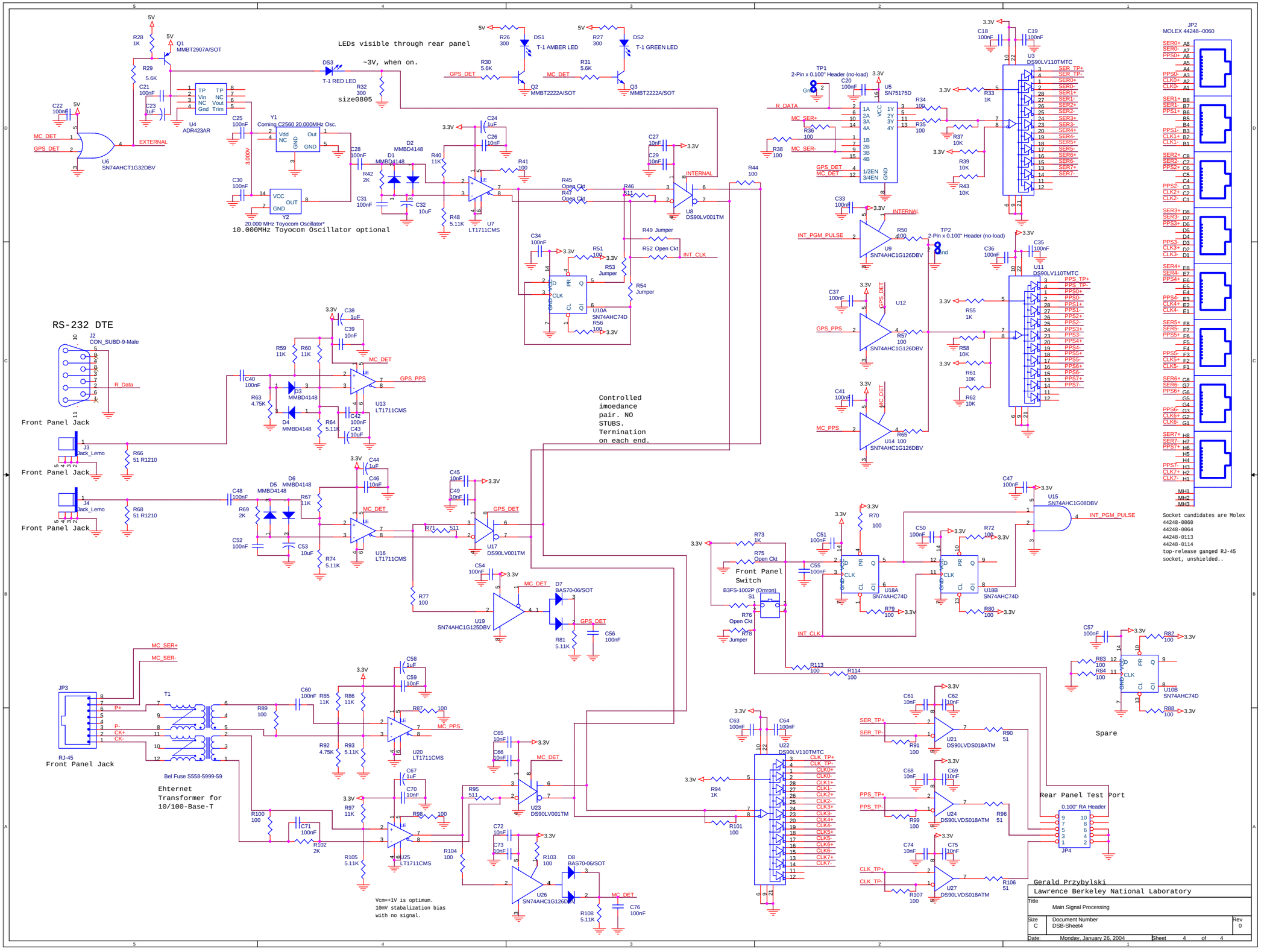
LEDs visible through rear panel
~3V, when on.
size0805
RS-232 DTE
Front Panel Jack
Controlled imoedance pair. NO STUBS. Termination on each end.
Front Panel Switch
Spare
Rear Panel Test Port
Ehternet Transformer for 10/100-Base-T
Vcm=+1V is optimum. 10mV stabalization bias with no signal.
Socket candidates are Molex 44248-0060 44248-0064 44248-0113 44248-0114 top-release ganged RJ-45 socket, unshielded..
Gerald Przybylski
Lawrence Berkeley National Laboratory
Title
Main Signal Processing
Size C
Document Number DSB-Sheet4
Rev 0
Date: Monday, January 26, 2004
Sheet 4 of 4