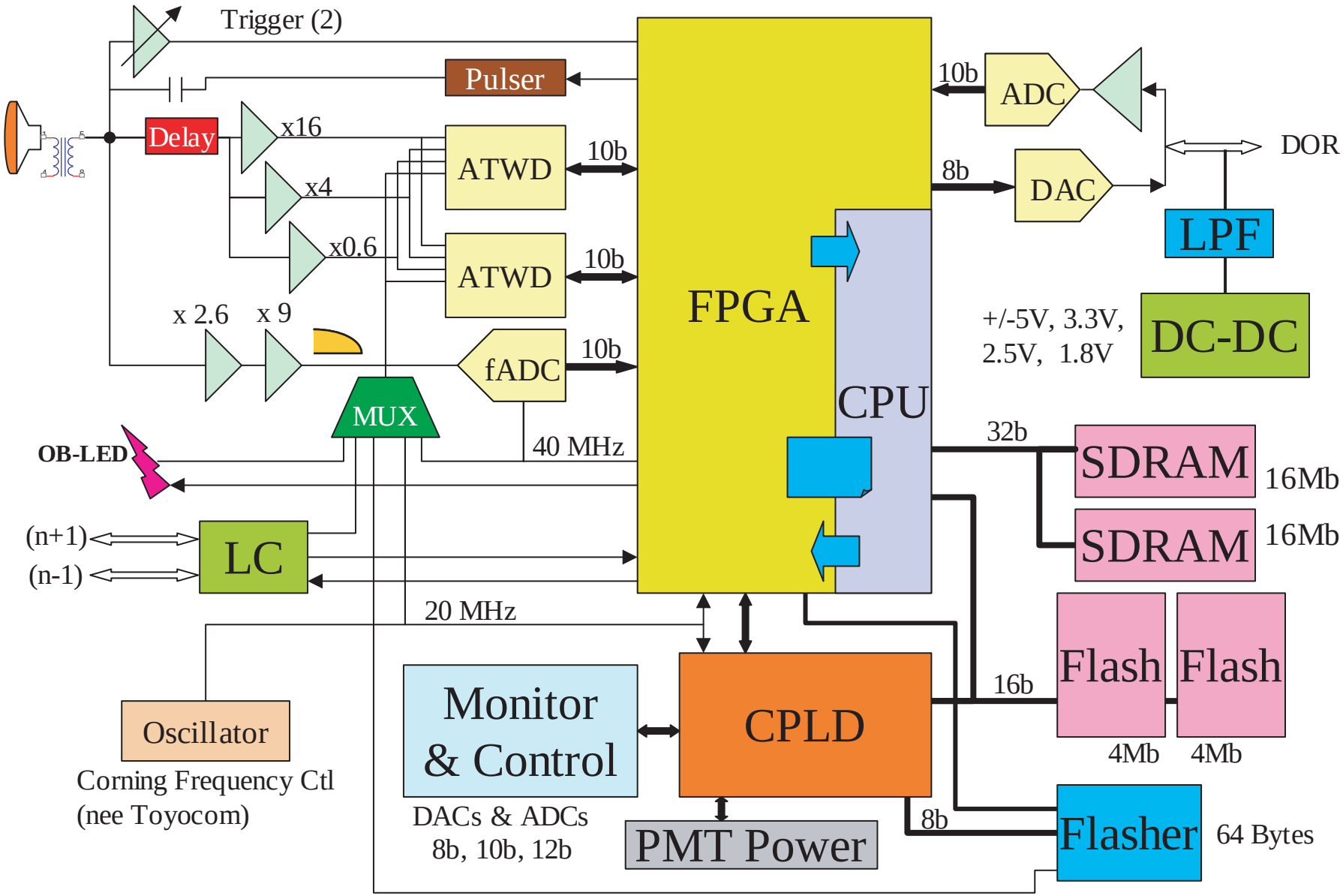Digital Optical Module Block Diagram